TC3 HD ROCKER STEP

PART #: TR58865

REDROCK

FITS: 2025-Up 4Runner

60-120 min

Cutting Not Required

Drilling Not Required

Torque & Tools

Fastener Size	Tightening Torque (ft-lbs)	Wrench Required		Allen Wrench Required	
☐ 6mm	☐ 7-8.5		☐ 10mm		☐ 4mm
■ 8mm	■ 18-20		■ 13mm		☐ 5mm
☐ 10mm	☐ 35-40		☐ 16mm		☐ 6mm
☐ 12mm	☐ 60-70		☐ 18mm		☐ 8mm

BEFORE INSTALLATION

REMOVE CONTENTS FROM BOX. VERIFY ALL PARTS ARE PRESENT. READ INSTRUCTIONS CAREFULLY BEFORE STARTING INSTALLATION. ASSISTANCE IS RECOMMENDED.

Part List

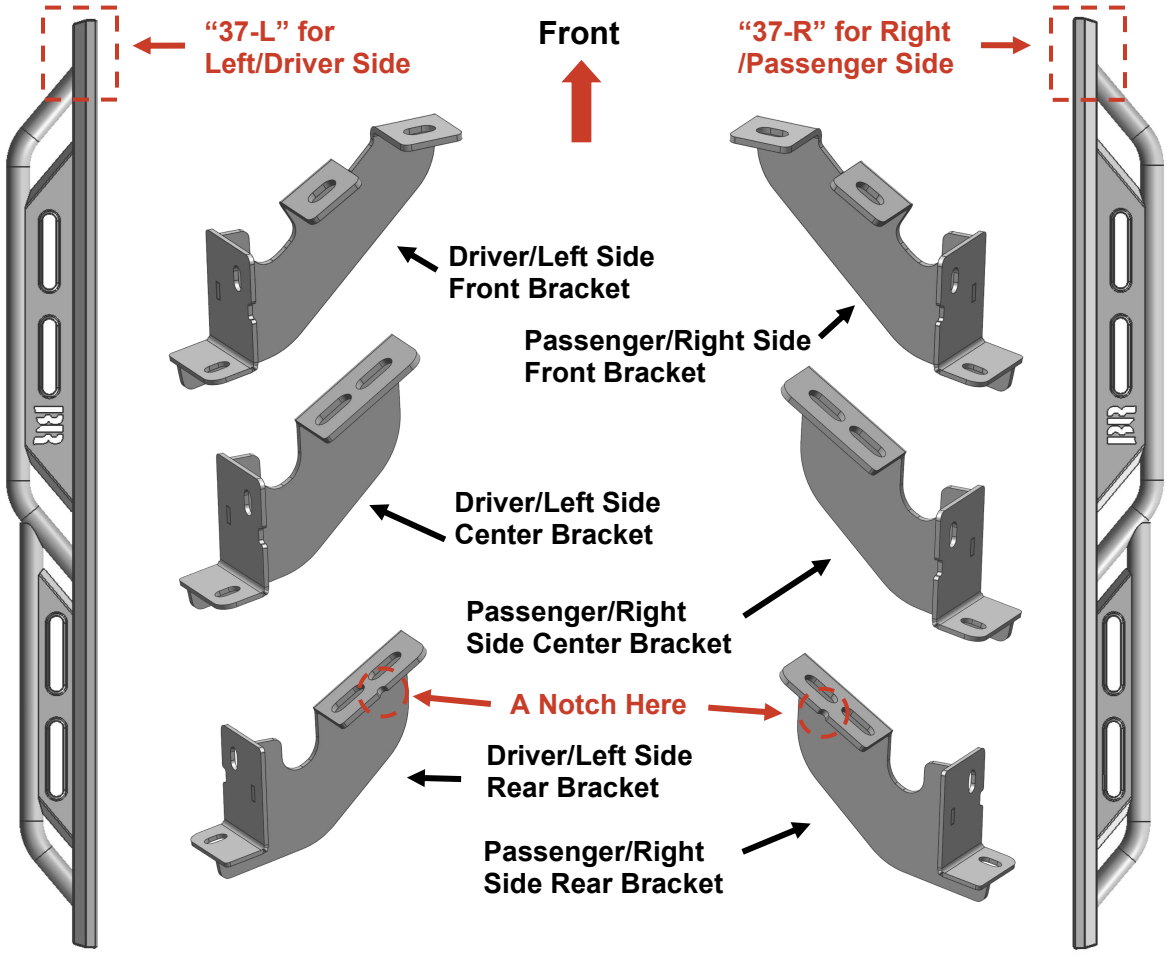

REDROCK

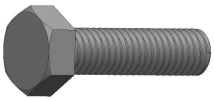
x12

8mm x 30mm
Hex Bolt

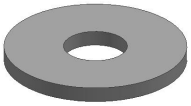
x12

8mm Flat Washer


x12

8mm Lock Washer

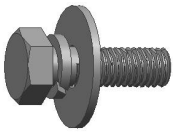
x12

8mm x 25mm
Combo Bolt

PLEASE NOTE THAT THE FOLLOWING PICTURES ARE BASED ON THE DRIVER SIDE INSTALLATION

STEP 1

Starting on the Driver/Left front of the vehicle, remove the plastic plugs, (or hex bolts), covering the threaded holes in the body panel, **(Fig 1)**.

FIG 1

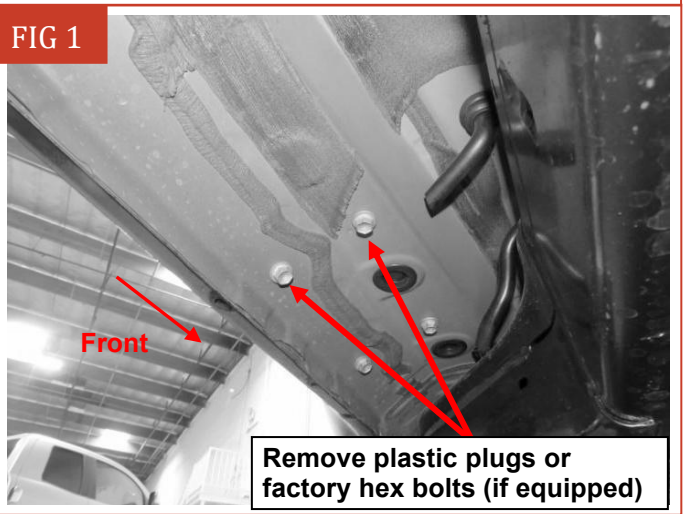

(Fig 1) Driver/Left front mounting location

STEP 2

Select the Driver/Left Front Mounting Bracket. Attach the Bracket to the front mounting location with (2) 8mm Hex Bolts, (2) 8mm Lock Washers and (2) 8mm Flat Washers, **(Figs 2)**. Do not tighten hardware at this time.

FIG 2

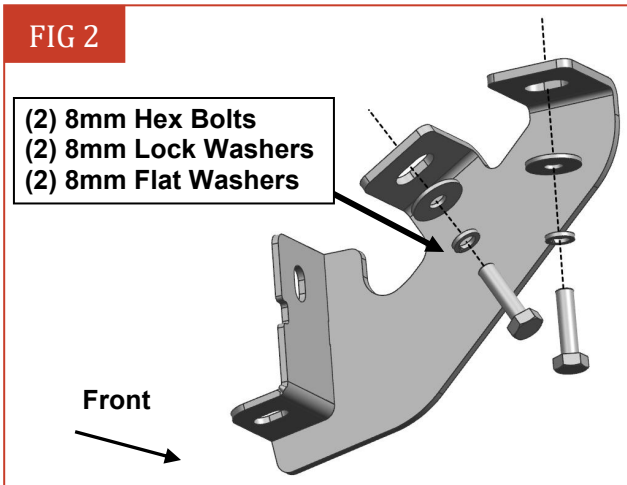

(Fig 2) Attach Driver/Left Front Mounting Bracket to the front mounting location

STEP 3

Move along the body panel to the center mounting location, **(Fig 3)**. Select (1) Driver/Left Center Mounting Brackets. Attach the Mounting Bracket on center mounting location, **(Fig 4)**. Do not tighten hardware.

FIG 3

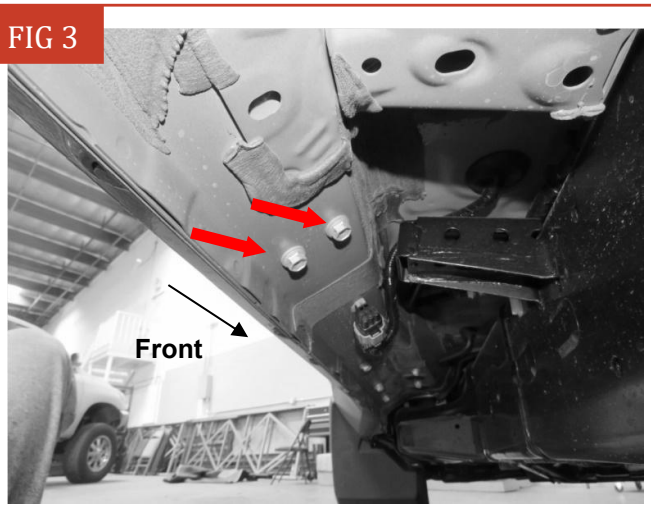

(Fig 3) Driver/Left center mounting location

FIG 4

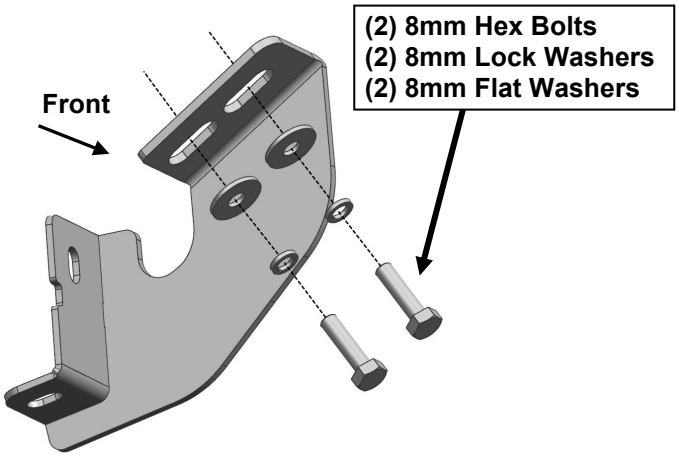

(Fig 4) Attach (1) Driver/Left Center Mounting Bracket to the center location

FIG 6

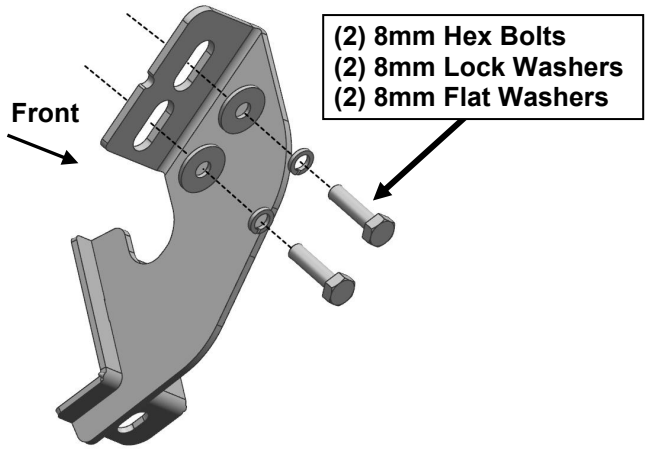

(Fig 6) Attach (1) Driver/Left Rear Mounting Bracket to the Rear location

STEP 4

Attach (1) Driver/Left Rear Mounting Bracket to the Rear location,**(Fig 5)** . Do not tighten hardware.

FIG 5

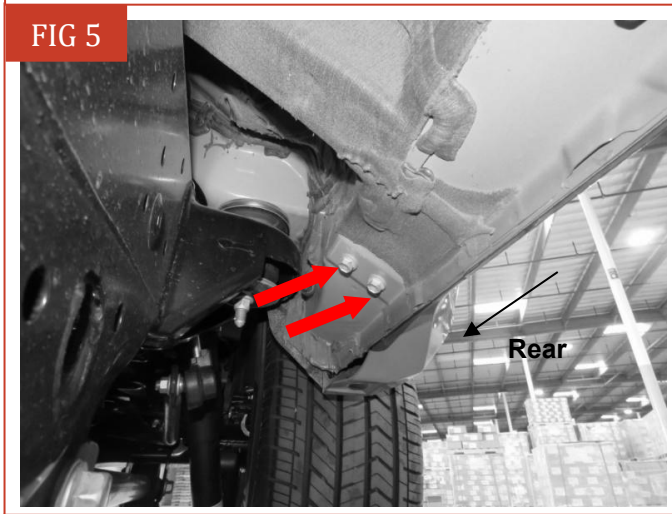

(Fig 5) Diver/Left rear mounting location

STEP 5

Select the Driver/Left Running Board. **NOTE:** The Driver/Left Running Board will have a "**37-L**" on the front. Carefully place Running Board on the brackets. **IMPORTANT:** Do not slide the Running Board front to back or damage to the finish may result. Attach Running Board to the (3) Mounting Brackets with (6) 8mm Combo Bolts, **(Fig 7)**. Do not tighten hardware.

FIG 7

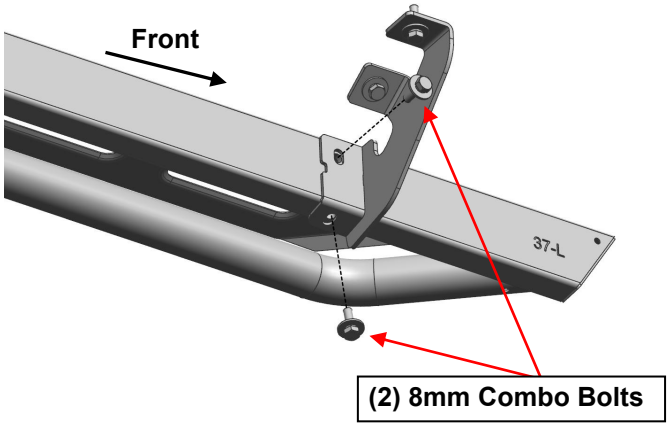

(Fig 7) Attach Driver/Left Running Board to the Mounting Brackets

STEP 6

Level and adjust the Running Board and fully tighten all hardware.

STEP 7

Repeat **Steps 1—6** to attach the Passenger/Right Running Board.

STEP 8

Do periodic inspections to the installation to make sure that all hardware is secure and tight.

Attention

To protect your investment, do not use any type of polish or wax that may contain abrasives that could damage the finish.

Mild soap may be used also to clean the Running Boards.